DUAL OP-AMP STANDARD PIN OUT TEST

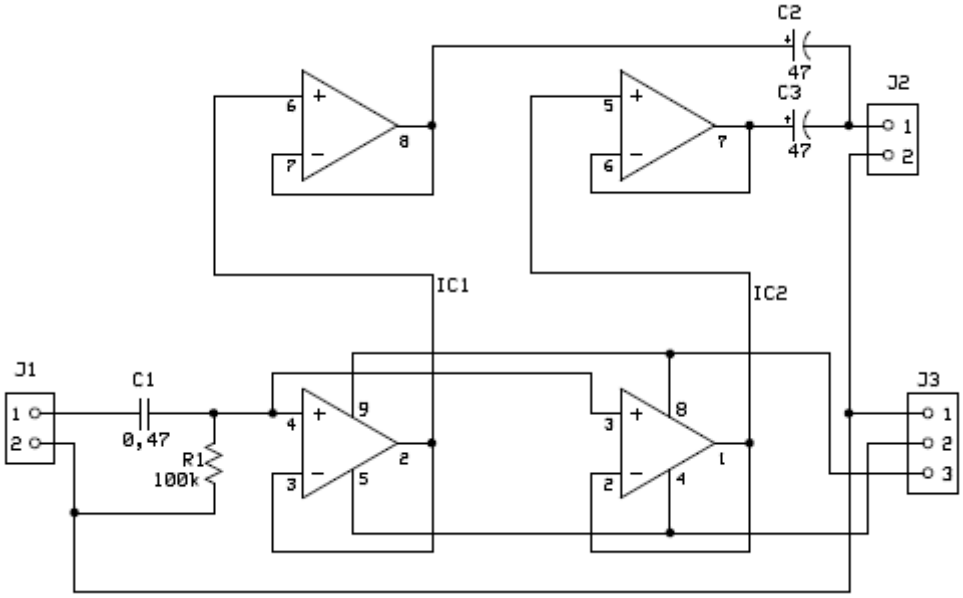

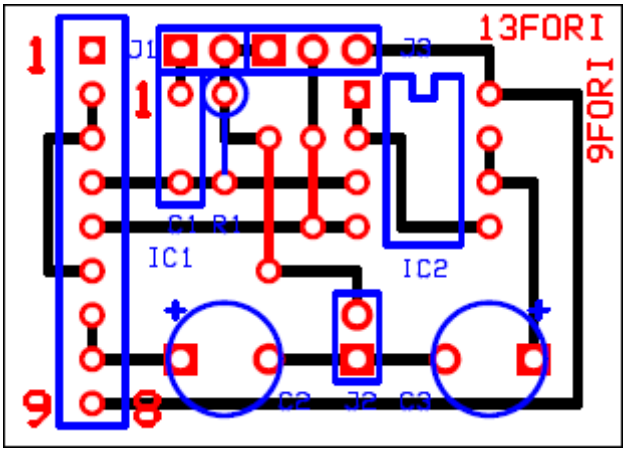

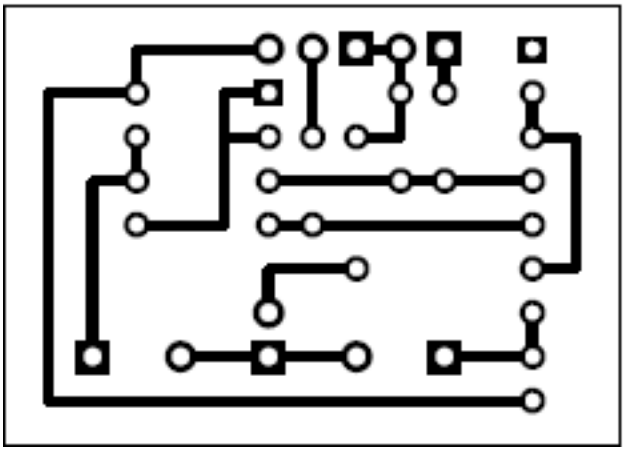

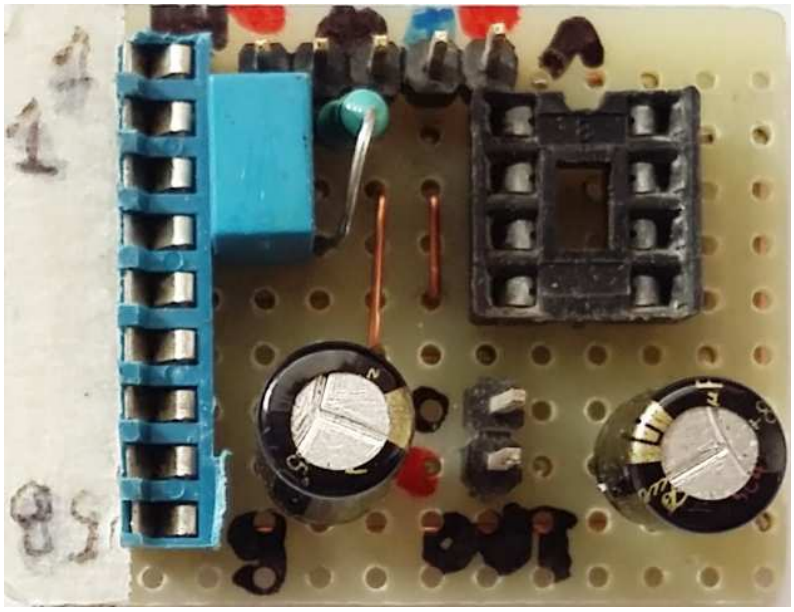

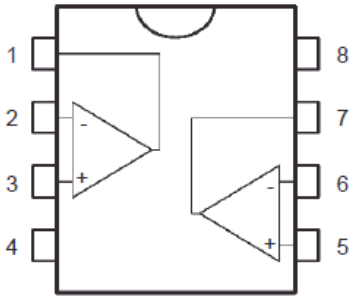
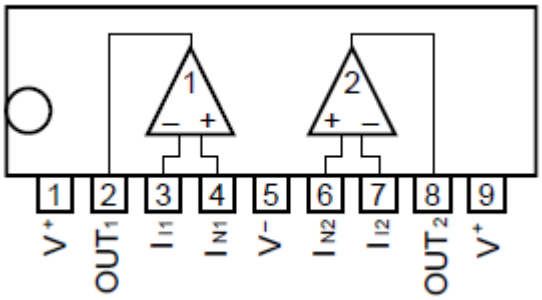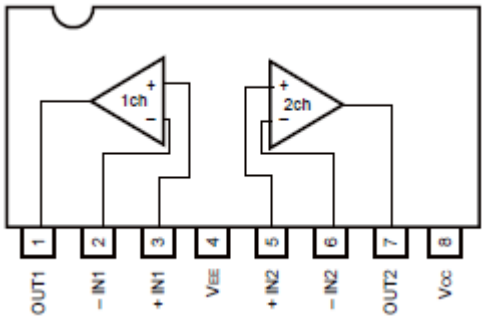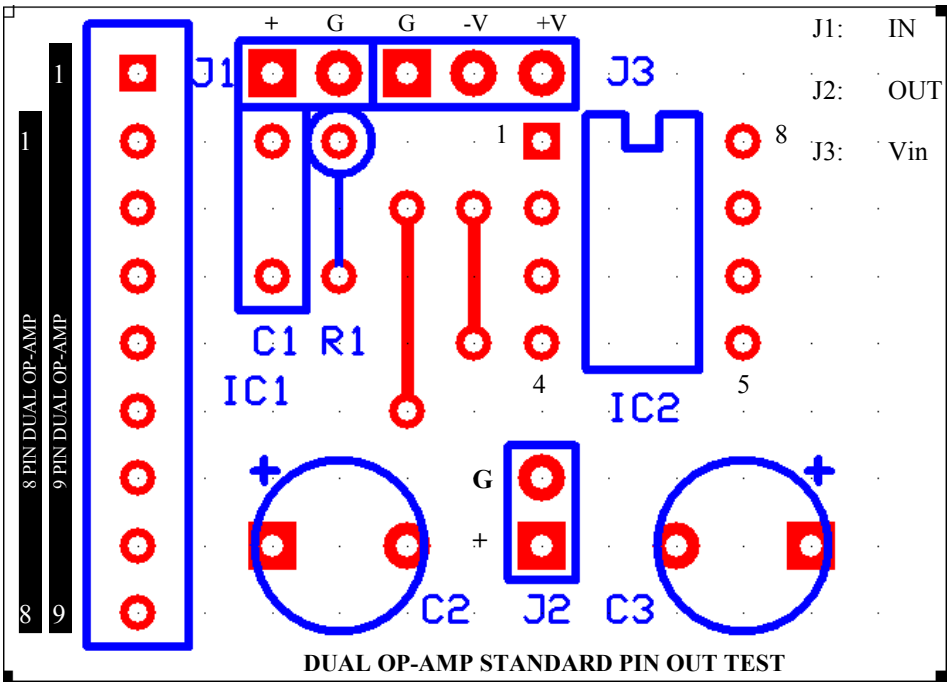
1 - Output 1
2 - Inverting input 1
3 - Non-inverting input 1
4 - V_{CC}^{-}
5 - Non-inverting input 2
6 - Inverting input 2
7 - Output 2
8 - V_{CC}^{+}